DPH-END (Lateral)

DPH-Series

©copyright, 2018, BUZON PEDESTAL INTERNATIONAL

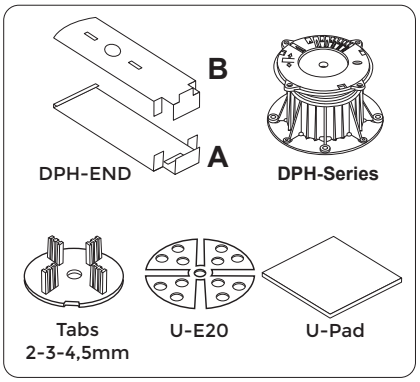

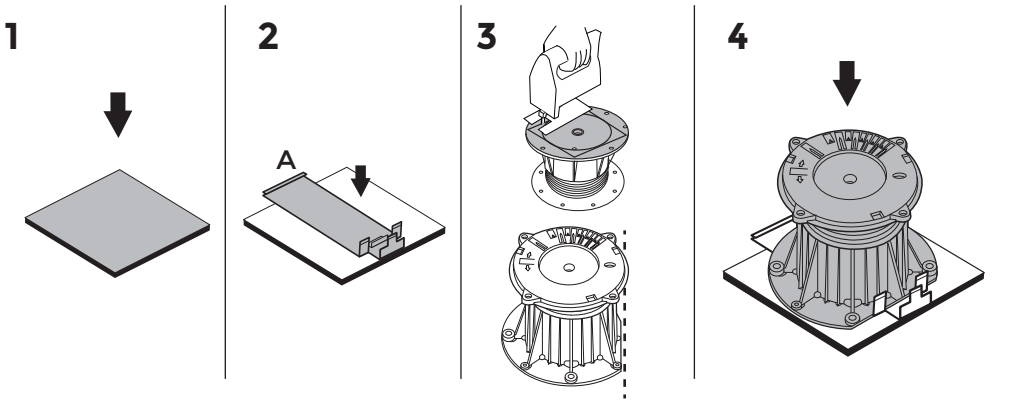

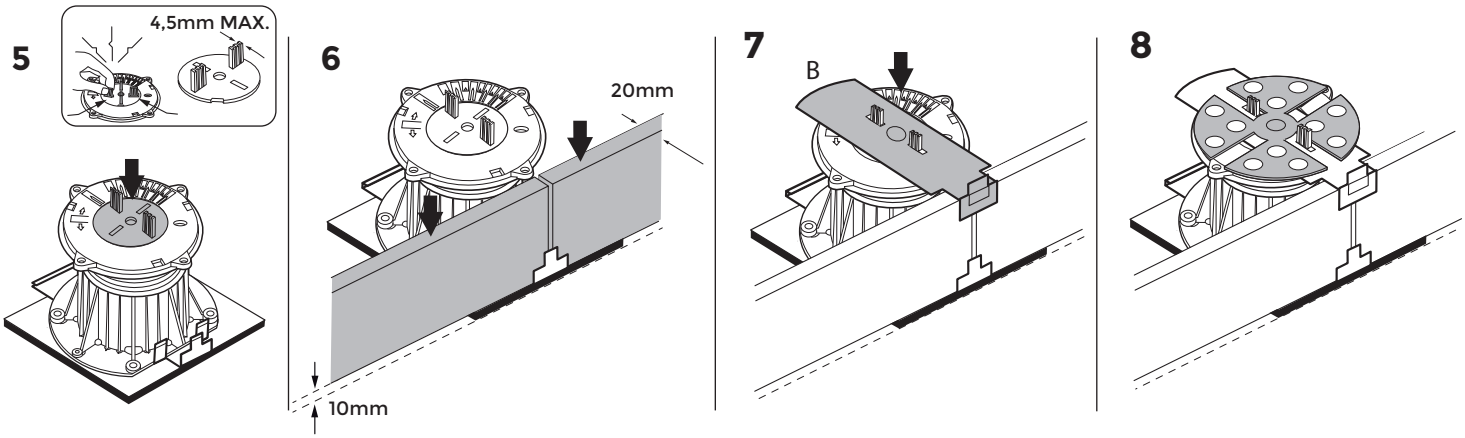

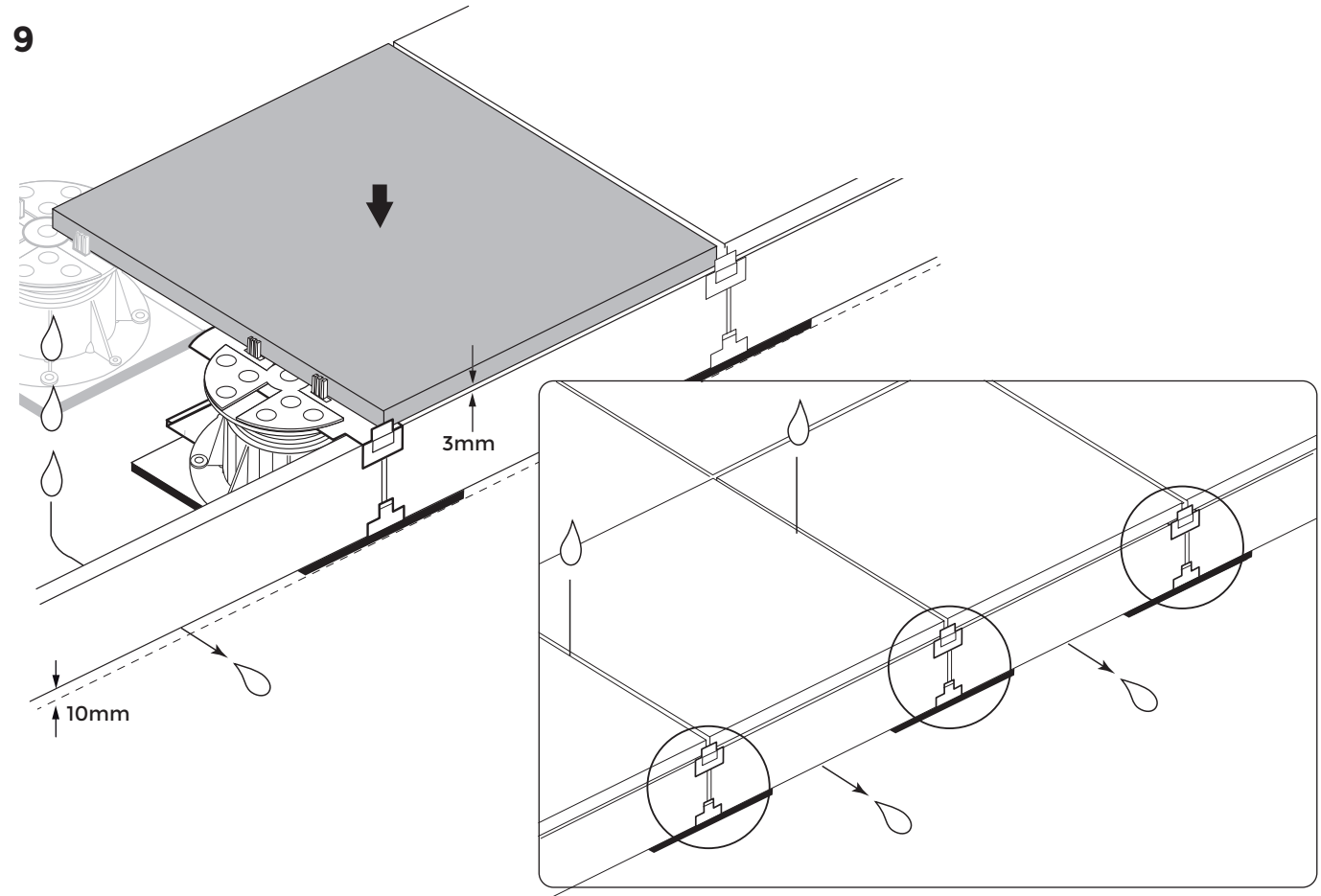

Ref. 34-GNO 75 Rev.1 -11/04/2018

The content of this document is not contractual and constitutes only a suggestion of use. Subject to error, omission or modification.

©copyright, 2018, BUZON PEDESTAL INTERNATIONAL

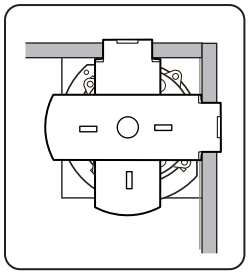

1

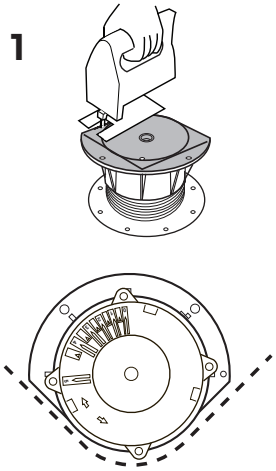

2

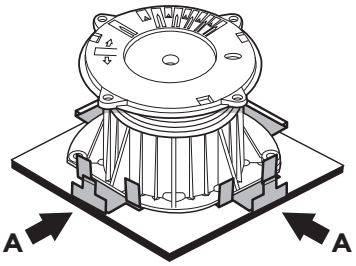

3

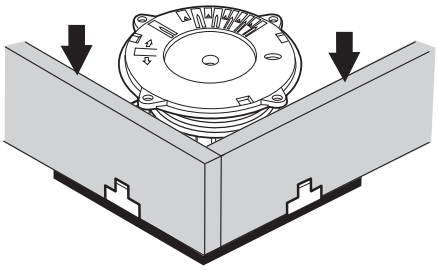

4

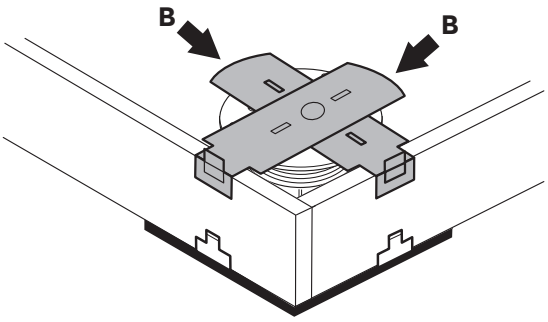

5

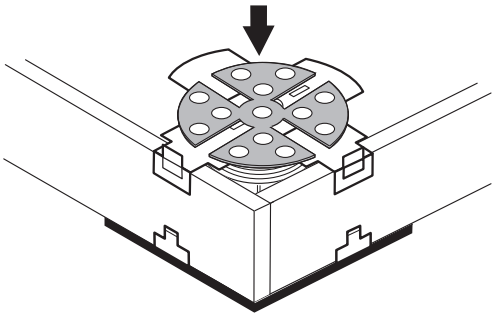

6

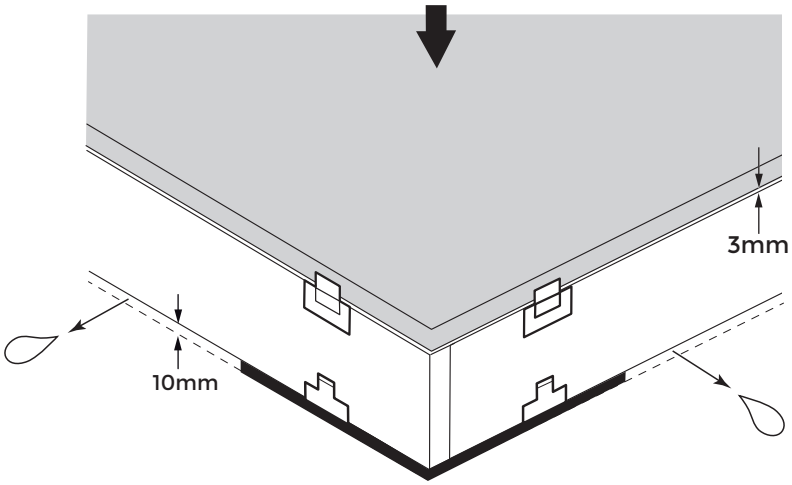

Ref. 34-GNO 17 Rev.0 - 9/04/2018

The content of this document is not contractual and constitutes only a suggestion of use. Subject to error, omission or modification.