DPH-11 / 645 → 850mm
Assembly

DPH-Series

©copyright, 2018, BUZON PEDESTAL INTERNATIONAL

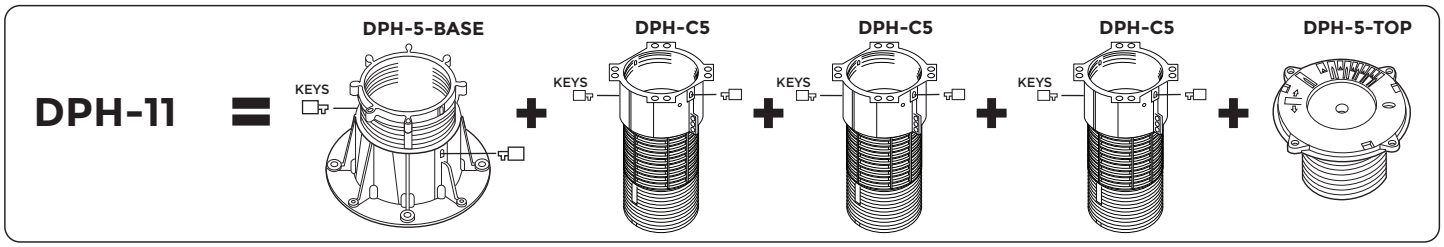

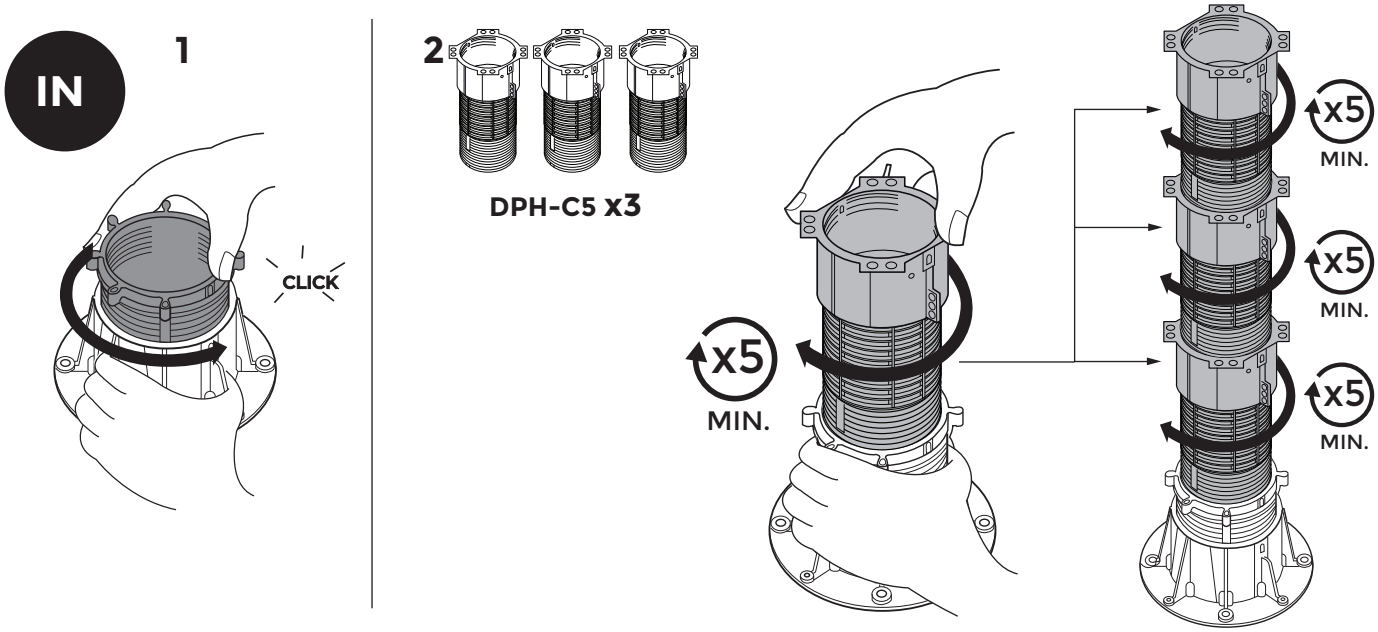

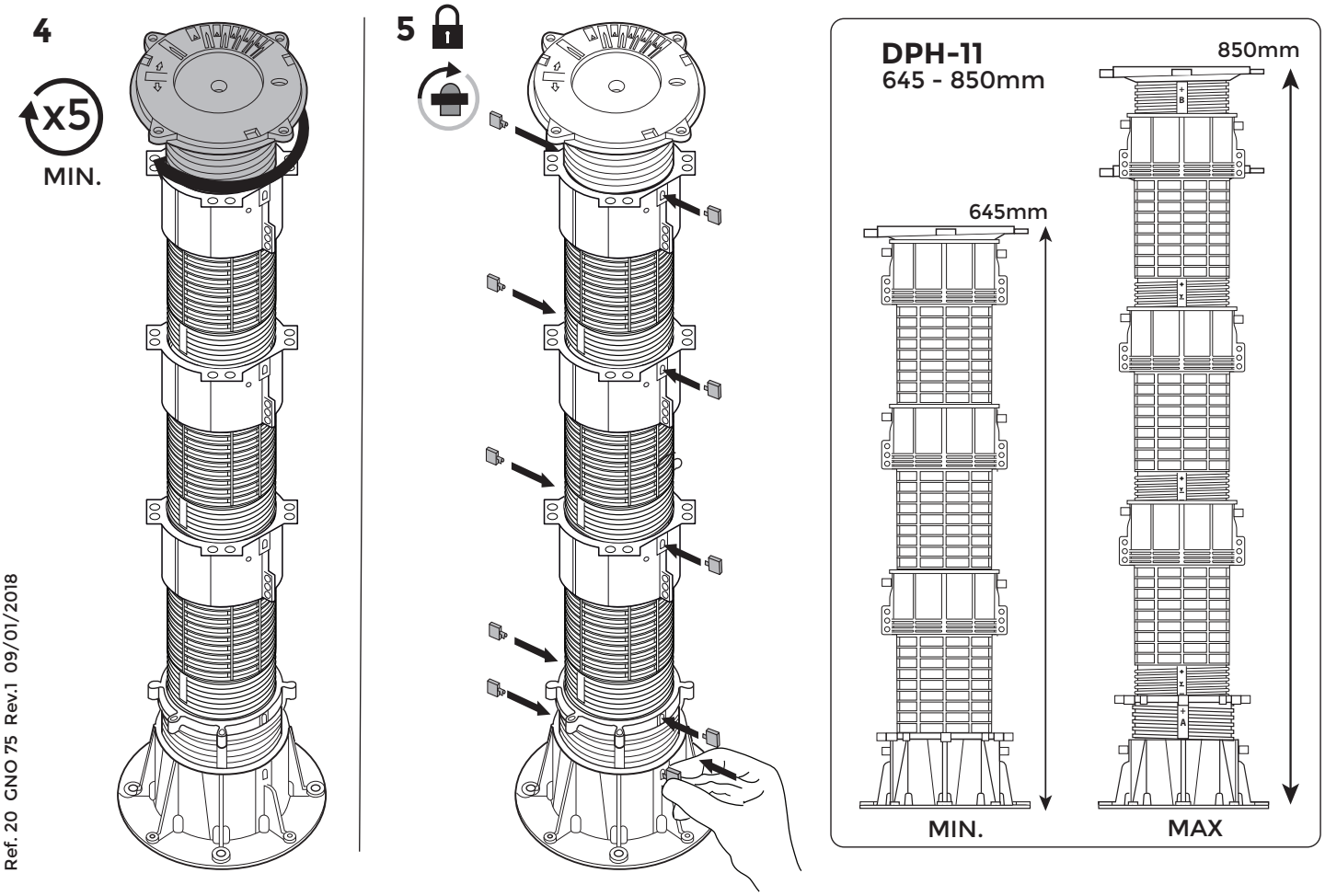

Ref. 20 GNO 75 Rev.1 09/01/2018

The content of this document is not contractual and constitutes only a suggestion of use. Subject to error, omission or modification.

©copyright, 2018, BUZON PEDESTAL INTERNATIONAL

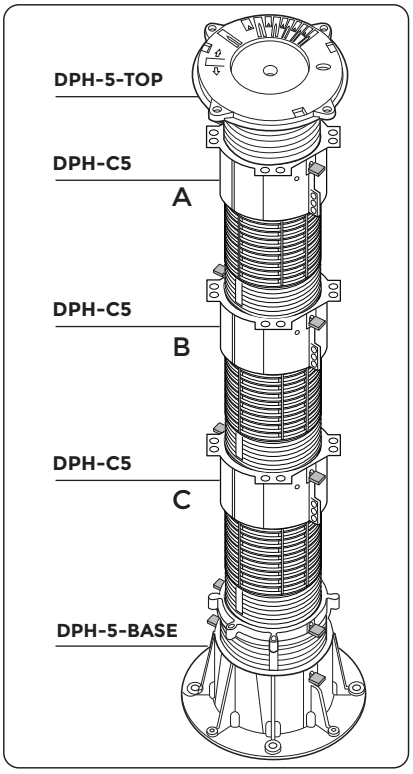

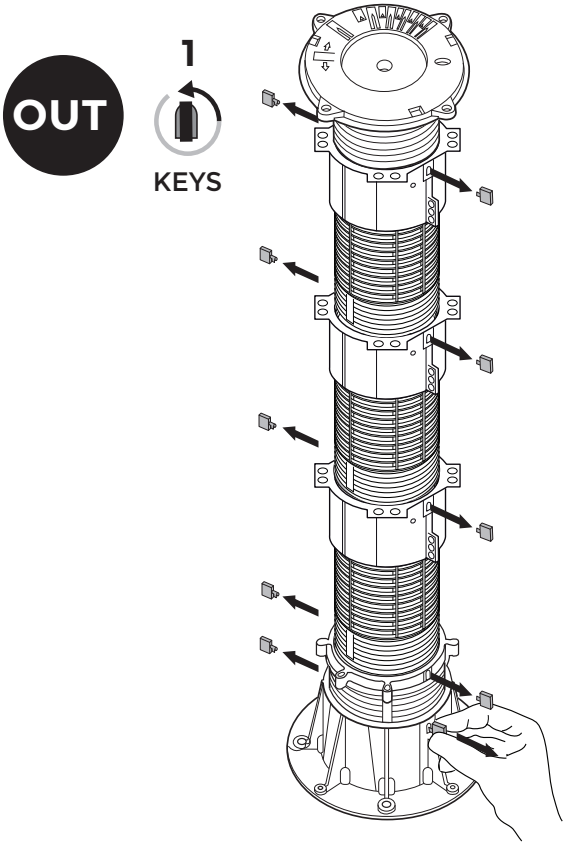

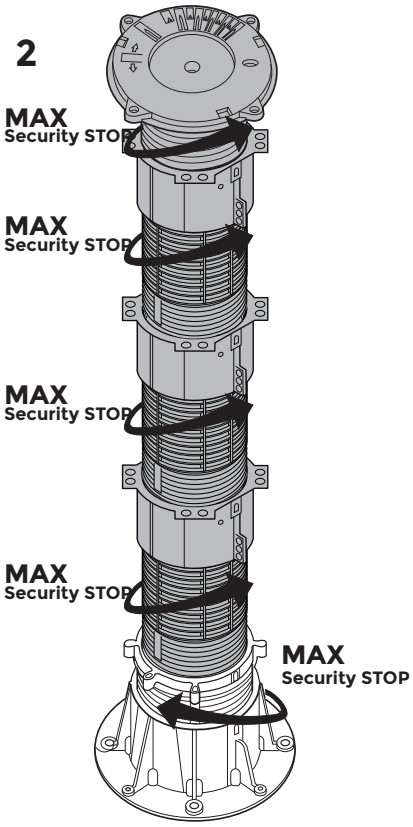

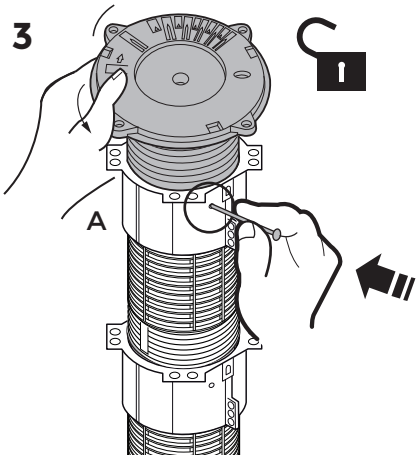

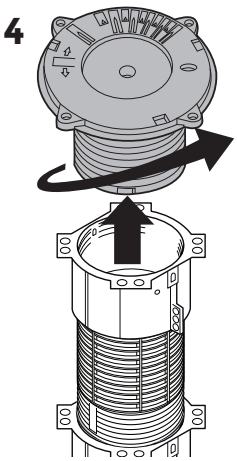

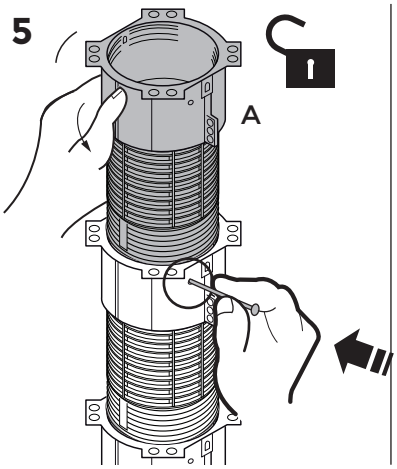

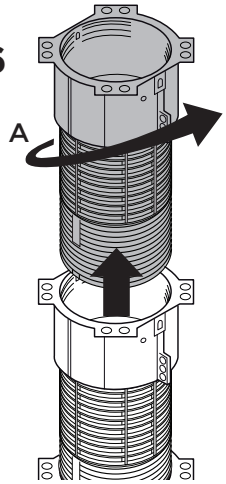

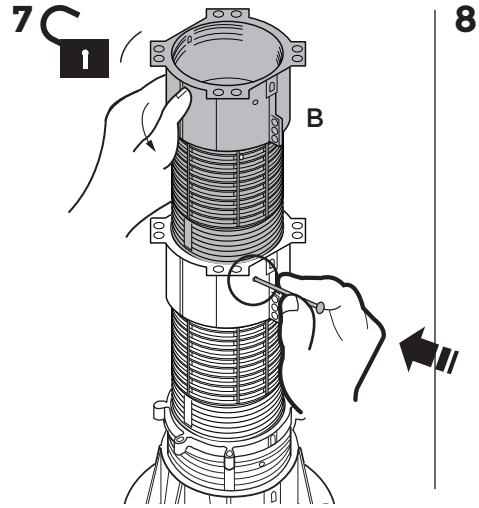

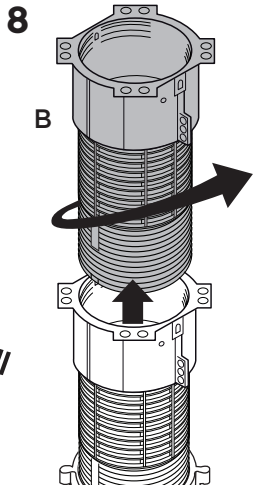

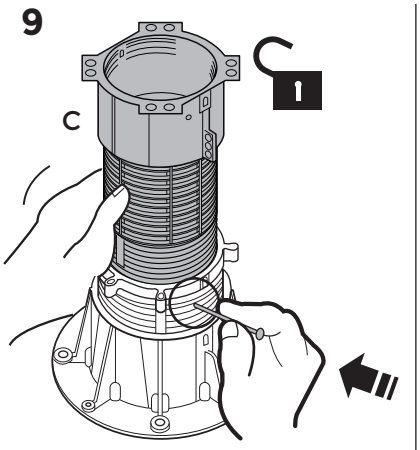

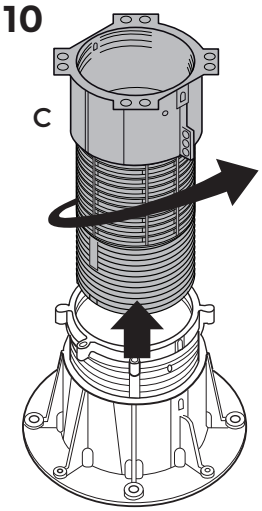

Ref.20Bis GNO 75 Rev.0 13/03/2018

The content of this document is not contractual and constitutes only a suggestion of use. Subject to error, omission or modification.